FLOOD STANDARD SMOOTH BRASS 220-240V AC 50/60Hz

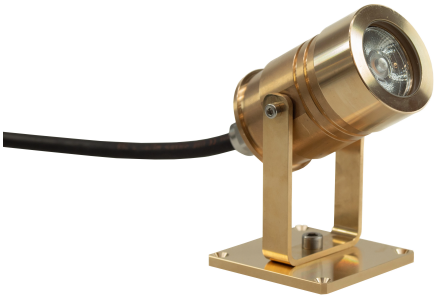

The Floodlight series was designed using modern simulation methods in order to obtain the highest product quality.

- based on CREE® LEDs
- IP67
- made of brass
- 220-240V AC
- 5-year warranty
- 7 W

CREE LED POWERED

Working temperature range	-20˚C ÷ +55˚C
IP protection class	IP67
Lifetime L80B10	≥ 60 000h
Impact resistance	IK10
Protection class	I
Connection	0.5m
Wiring	H07RN-F 3G1
Dimming	ON-OFF
Luminous flux tolerance	±10%
Angle of distribution	10˚, 20˚, 45˚

TECHNICAL DRAWINGS

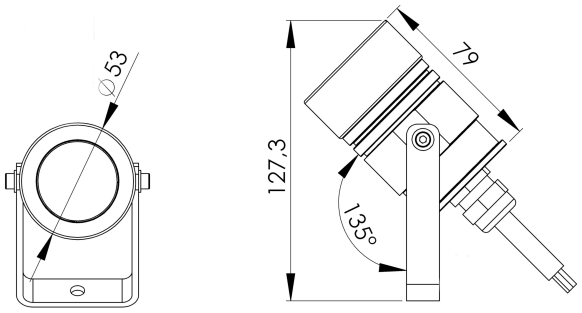

Niviss reserves the right to make technical changes without prior notice

FLOOD STANDARD SMOOTH BRASS 220-240V AC 50/60Hz

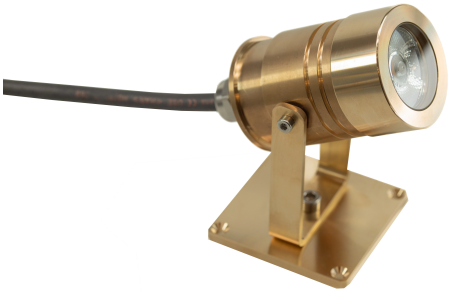

The Niviss outdoor LED lighting fixture can be used for lighting many places and objects such as:

- parks
- gardens
- exterior walls
- squares
- premises
- plants

ELECTRICAL INSTALLATION

Connecting to the power supply should be done when the power supply is off.

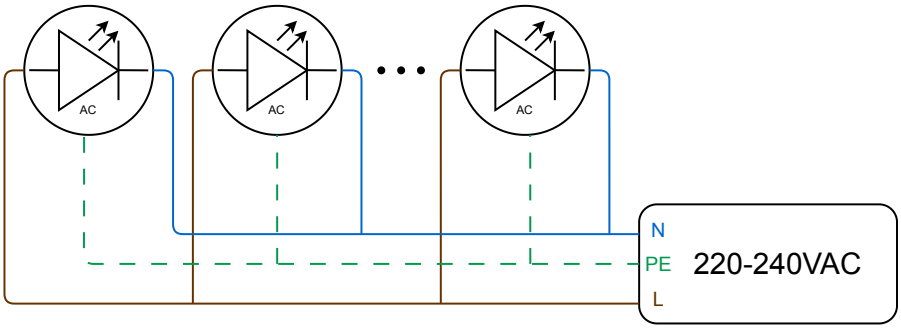

ORDER CODE AND TECHNICAL SPECIFICATIONS OF VARIANTS

VARIANT CODES IN THE TABLE BELOW TECHNICAL SPECIFICATIONS OF VARIANTS IN DATASHEET OF VARIANT

GENERAL TERMS OF USE

- Before using a luminaire, make sure what voltage range it is designed to.
- Connecting to the power supply should be done when the power supply is off.
- Use appropriate sockets and plugs: Ensure that your electrical sockets and plugs are compatible with the lamp's voltage and plug type.
- Use appropriate wiring for luminaires.
- Avoid overloading electrical circuits by not connecting too many lamps to a single outlet or circuit. Check the condition of the power cord and plug for any signs of damage or wear.
- Pay attention to the correct polarity when connecting the luminaires. Incorrect polarity may prevent the luminaires from functioning properly or could potentially damage them.
- Installation of the luminaires should be done by qualified person.
- Keep your luminaires clean and free from dust and debris, as it can affect their performance.
- Follow the luminaire connection diagram above.
- Avoid direct exposure of bright light sources to your eyes. Position luminaires in a way that minimizes direct glare or uncomfortable brightness.
- Ensure that the luminaire is placed on a stable surface and kept away from flammable materials. Allow sufficient clearance around the luminaire to prevent overheating.
- Keep away from fire.
- Make sure your electrical installations are properly grounded and meet the necessary safety standards. Avoid overloading circuits by not connecting too many lamps to a single outlet or circuit.
- Pay attention on correct connection of Line and Neutral to electric network.

ENVIRONMENTAL CAUTION!

It is prohibited to dispose of obsolete and waste electrical and electronic equipment together with regular household wastes. They should be properly sorted and recycled. Old electrical and electronic equipment should be returned to a waste collection point established by a waste-management service. Waste electrical and electronic equipment can be broken down to base materials and then recycled. For more information regarding waste management please contact your local authorities, waste-management service or the seller of electrical and electronic devices.

CONTACT: +48 58 781 33 99 sales@niviss.com www.niviss.com

Niviss reserves the right to make technical changes without prior notice

ORDER CODE AND TECHNICAL SPECIFICATIONS OF VARIANTS

Index	IP protection class	[DEG]	[K]	Lumen Output [lm]	CRI/RA	[W]	Power supply type	Body material	Front material	Front shape
FLOOD-STANDARD-7-AW-10-RD-BB-HV-COB-R	IP67	10	2200	540	≥80	7	220-240V AC 50/60Hz	Brass	Brass	◯
FLOOD-STANDARD-7-AW-20-RD-BB-HV-COB-R	IP67	20	2200	540	≥80	7	220-240V AC 50/60Hz	Brass	Brass	◯
FLOOD-STANDARD-7-VW-10-RD-BB-HV-COB-R	IP67	10	2700	590	≥80	7	220-240V AC 50/60Hz	Brass	Brass	◯
FLOOD-STANDARD-7-VW-20-RD-BB-HV-COB-R	IP67	20	2700	590	≥80	7	220-240V AC 50/60Hz	Brass	Brass	◯
FLOOD-STANDARD-7-WW-10-RD-BB-HV-COB-R	IP67	10	3000	650	≥80	7	220-240V AC 50/60Hz	Brass	Brass	◯
FLOOD-STANDARD-7-WW-20-RD-BB-HV-COB-R	IP67	20	3000	650	≥80	7	220-240V AC 50/60Hz	Brass	Brass	◯
FLOOD-STANDARD-7-NW-10-RD-BB-HV-COB-R	IP67	10	4000	710	≥80	7	220-240V AC 50/60Hz	Brass	Brass	◯
FLOOD-STANDARD-7-NW-20-RD-BB-HV-COB-R	IP67	20	4000	710	≥80	7	220-240V AC 50/60Hz	Brass	Brass	◯
FLOOD-STANDARD-7-CW-10-RD-BB-HV-COB-R	IP67	10	5000	780	≥80	7	220-240V AC 50/60Hz	Brass	Brass	◯
FLOOD-STANDARD-7-CW-20-RD-BB-HV-COB-R	IP67	20	5000	780	≥80	7	220-240V AC 50/60Hz	Brass	Brass	◯

Niviss reserves the right to make technical changes without prior notice